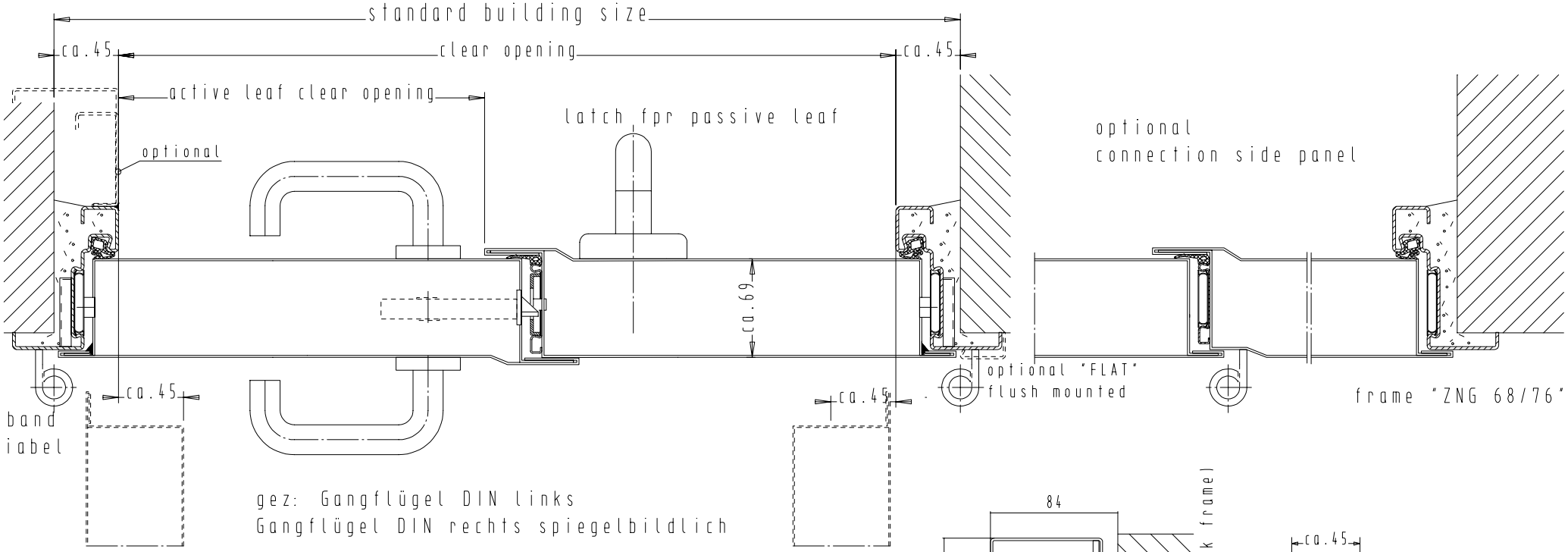

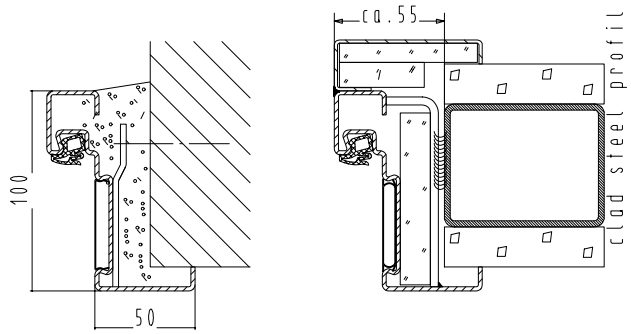

frame "ZNG 68/76"

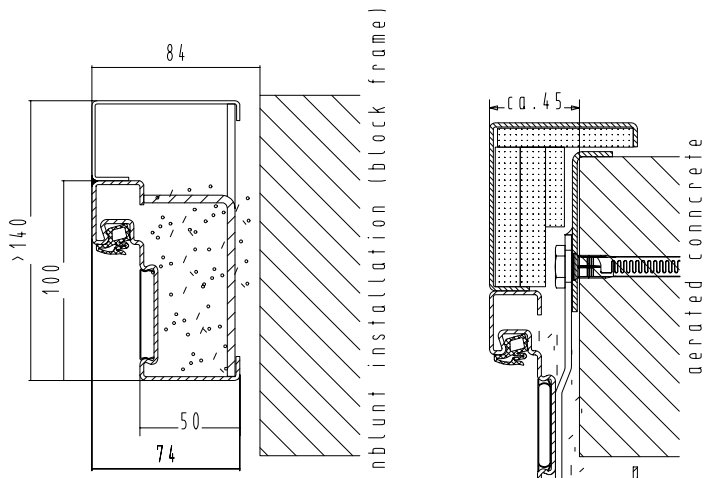

frame "ZNG 68/76"

Detail glazing
see vertical cross-section

FRANZEN
Feuerschutztüren

Zechenring 23; 41836 Hückelhoven

Double-leaf steel smoke protection door
"System Schröders RSN-2"

horizontal cross-section

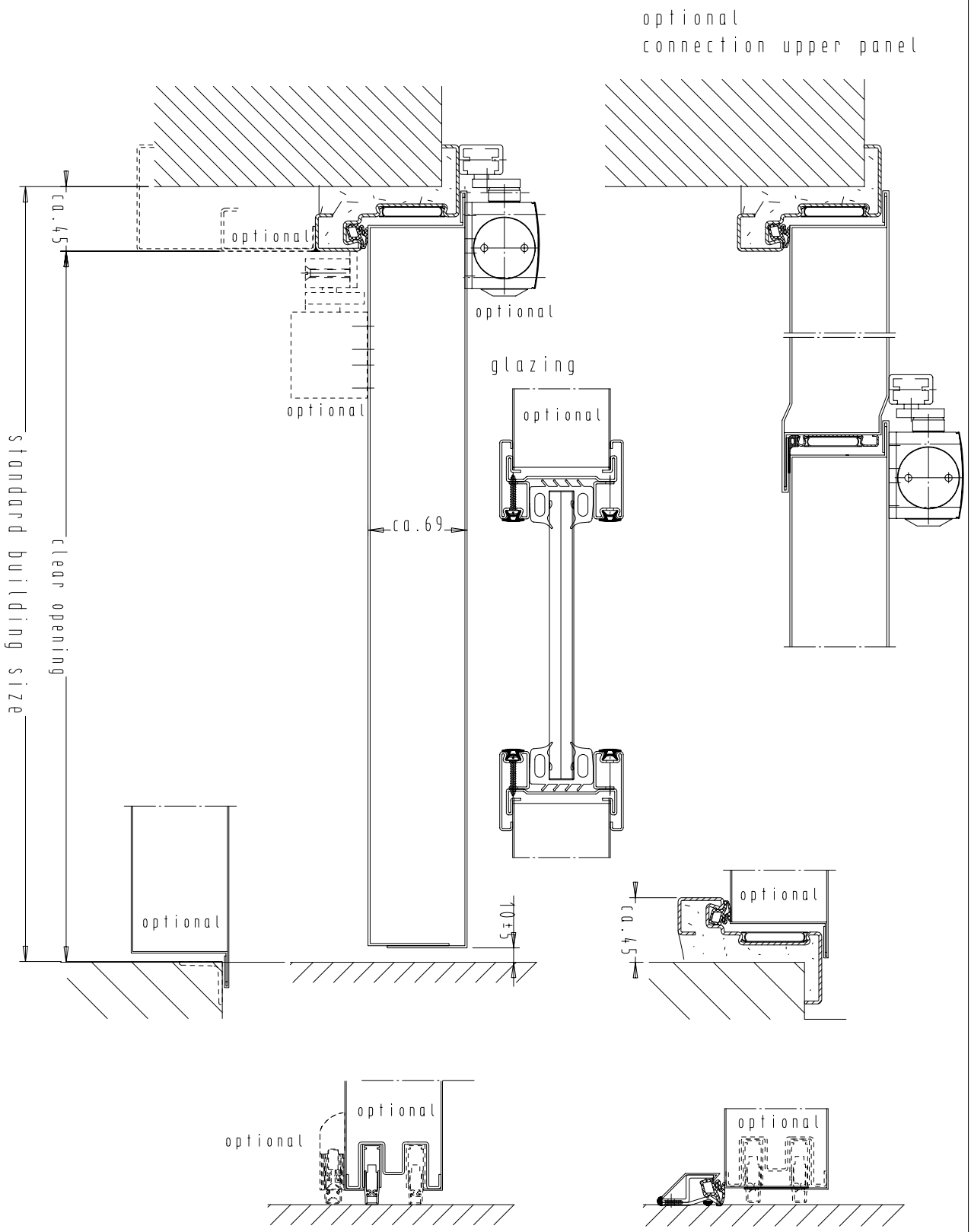

installation and frame variants
see horizontal cross-section

FRANZEN
Feuerschutztüren

Zechenring 23; 41836 Hückelhoven

Double-leaf smoke protection door
"System Schröders RSN-2"

vertical cross-section